SEARCH Journal of Media and Communication Research
Online ISSN: 2672-7080
© SEARCH Journal 2026
SEARCH 18(5), 89–112
Special Issue: 5th International Conference on Media Studies Conference (ICMS25)
DOI: 10.58946/search-18.5.P6
https://fslmjournals.taylors.edu.my/search/

Visual storytelling through mise-en-scène: Investigating multidimensional audience engagement in short films on social media

*Siti Salwa binti Bahari
School of Multimedia Technology and Communication, Universiti Utara Malaysia, Malaysia
sitisalwabahari87@gmail.com

Aselawati binti Che Ab Adziz
School of Multimedia Technology and Communication, Universiti Utara Malaysia, Malaysia

ABSTRACT

The growing popularity of short films on social media has positioned visual storytelling as a key strategy for sustaining audience engagement. However, existing research has focused mainly on short-form videos and platform characteristics, with limited attention to cinematic visual elements such as mise-en-scène. This study examines how mise-en-scène, as a visual storytelling mechanism, shapes cognitive, affective, and behavioural engagement among social media short-film audiences. Based on the Visual Rhetoric Theory (VRT), a cross-sectional quantitative study was conducted involving 280 young adults in Malaysia, aged between 18 and 35 years who regularly watch short films on social media. Data were analyzed using Partial Least Squares Structural Equation Modeling (PLS-SEM). The findings show that mise-en-scène has a significant positive effect on all three dimensions of engagement. Specifically, affective engagement recorded both the strongest direct relationship ($\beta = 0.634$) and the largest effect size ($f^2 = 0.674$), while cognitive engagement ($\beta = 0.483$) and behavioural engagement ($\beta = 0.472$) showed comparatively moderate direct effects. This indicates that affective engagement is the most strongly influenced by cinematic visual storytelling. The study findings also show that mise-en-scène not only plays a role as an aesthetic component in filmmaking, but it also acts as a persuasive visual storytelling mechanism in shaping audience interpretation, emotional engagement and participatory behaviour. This study contributes to the literature by extending the application of the Visual Rhetoric Theory to the contemporary context of short films on social media and providing empirical evidence that cinematic visual storytelling is still a key driver of audience engagement in today's increasingly competitive digital engagement ecosystem. In addition, the findings of this study also provide practical implications for filmmakers, digital content creators and marketers who wish to optimize audience engagement through more effective visual storytelling strategies, especially for short films.

Keywords: ***Mise-en-scène, short films, visual storytelling, engagement, social media, audience impact***

* Corresponding author

INTRODUCTION

The revolution and rapid development of digital media has changed the way audiences access audio-visual content. This phenomenon includes changes in the style and way audiences watch films. Traditionally, films were distributed through cinemas, television broadcasts and film festivals; however, nowadays the shift in film distribution platforms has encouraged films to be produced with shorter durations (short films) so that they are accessible through digital platforms, to suit the social media environment, and to align with the needs of the audience (Hui & Yang, 2023; Kennedy-Karpat, 2022). In addition, the increasing popularity of these platforms has made short films an increasingly influential form of digital storytelling, especially among young people who use mobile technology and social media as the main medium to access audio-visual content and entertainment (Vardeman, 2024).

With the rise of short films in social media, visual storytelling has become one of the most significant communication forms in today's digital culture. Unlike traditional short-form videos that usually aim to convey information with no special structure, short films are created based on narrative structure, cinematic composition and visual aesthetics to construct meaning, evoke emotions and impact audience interpretation (Zimand, 2024). Through the strategic use of visual elements, short films are able to create a deep and immersive experience, help audiences understand the narrative, and also form emotional and behavioural relationships with the content presented. Along with this rapid development, digital audio-visual content on social media has become too dense and contributes to the phenomenon of the attention economy, which is a situation where content producers compete to attract and maintain audience engagement (Munaro et al., 2021).

In such an environment, audience engagement not only functions as an indicator of attention and interaction but also becomes an important determinant of content visibility, viral potential, audience retention and commercial sustainability of content (Hernández-Santaolalla & Barrientos-Bueno, 2020). Therefore, filmmakers and content creators increasingly rely on variety in producing their content to capture audience attention, generate emotional resonance and stimulate audience participation in highly competitive digital platforms. This has placed cinematic elements at the center of the content strategy.

Mise-en-scène is a key component of cinematic storytelling. It refers to the arrangement of visual elements within a film frame, including settings, props, costumes, makeup, lighting, color, actor movement and spatial composition (Astuti et al., 2024; Dite, 2023; Ekhato, 2024). In the field of film studies, mise-en-scène plays a role in shaping narrative meaning, emotional atmosphere, visual symbolism and audience interpretation (Noorman & Nafisah, 2016). In addition to its aesthetic function, mise-en-scène also functions as a strategic visual storytelling mechanism, which can influence the way audiences see, interpret and respond to cinematic narratives. For example, the use of appropriate settings and props can depict a caste or civilization that is presented, the use of appropriate costumes and makeup can convey the character being acted out, and the use of color tones in a film can give different emotions to the audience.

It is important to note that while this study is theoretically grounded in cinematic visual elements, particularly mise-en-scène, it does not assume that respondents were

able to consistently distinguish structured short films from unstructured short-form videos encountered on social media, given that this differentiation is itself an evolving conceptual boundary within the literature (Ding, 2024; Fu, 2024). Given that social media platforms present a continuum of short-form audio-visual content ranging from highly structured cinematic narratives to loosely structured, algorithm-driven clips (Fu, 2024), the operational scope of this study is defined at the level of short-form narrative videos encountered organically on social media platforms, of which cinematic short films exhibiting mise-en-scène qualities represent a central subset (Oblak, 2026). Accordingly, the findings should be interpreted as reflecting audience perceptions of mise-en-scène across this broader spectrum of short-form narrative content, rather than being confined strictly to a formally verified category of cinematic short films (Tsai, 2026).

Problem statement

Although social media has facilitated the distribution and delivery of short films, the practical challenge remains in ensuring that short films broadcast on social media are able to attract and sustain audience engagement. Shifts in media consumption habits and the growing fragmentation of digital audiences have made traditional storytelling approaches less effective, creating a need for more effective narrative and cinematic strategies to attract and retain audience engagement (Rafik et al., 2025). Unlike regular short-form videos, which are typically produced without structure, short films rely heavily on cinematic visual storytelling to attract attention, evoke emotions and encourage audience participation within a limited viewing period. Beyond this practical challenge, a corresponding gap exists in the literature.

Studies on audience engagement continue to focus mainly on platform characteristics, content formats and social media videos in general, while cinematic visual aspects, particularly mise-en-scène, remain under-recognized as a mechanism that influences audience engagement (Liu et al., 2021; Shreedhar, 2021). Furthermore, audience engagement is often studied in a fragmented manner: most studies measure only behavioural engagement, such as how viewers like, comment on, and share content, while comprehensive studies encompassing cognitive, affective and behavioural engagement together remain scarce (Mirbagheri & Najmi, 2019). Although mise-en-scène has long been recognized as an important element in film theory and visual storytelling, its influence on this multidimensional form of audience engagement, particularly in the context of short films on social media, remains poorly understood. This gap not only limits the development of theory related to cinematic visual storytelling, but also constrains its practical application in the contemporary digital environment.

Accordingly, this study investigates the role of mise-en-scène as a visual storytelling mechanism in shaping audience engagement with short films distributed through social media platforms. Specifically, this study examines the extent to which mise-en-scène influences audience engagement in a multidimensional manner, namely cognitive, affective, and behavioural engagement, among young adult viewers. By extending the application of cinematic visual storytelling into the social media environment, this study contributes to the development of literature that combines the fields of film studies, visual communication, and social media engagement research. It also offers practical implications for filmmakers and digital content creators who wish

to increase audience engagement through more meaningful and impactful visual storytelling strategies.

LITERATURE REVIEW

Visual storytelling in contemporary audio-visual media

Social media has changed the way audio-visual content is produced, distributed and consumed by audiences. In this context, visual storytelling has become an increasingly important form of communication in contemporary audio-visual media (Nikulina et al., 2024). In general, visual storytelling refers to the strategic use of visual, audio and narrative elements to convey meaning, experience and emotion to the audience (Fu, 2024; Vázquez-Herrero & Haan, 2022; Williams, 2019). Compared to traditional storytelling that relies more on dialogue or text, visual storytelling uses images, sounds, movement and visual composition as the main medium to shape the audience's understanding and experience.

In the field of film and audio-visual media, visual storytelling is often considered a communication system that combines various cinematic elements such as mise-en-scène, cinematography, editing, production design and sound design (Bagherzadeh et al., 2023; Ilmaranta, 2023; Tian, 2023). For example, the arrangement of space, lighting, objects and visual composition plays an important role in helping the audience understand the message to be conveyed (Ilmaranta, 2023). In addition, the use of cameras, colours and lighting not only functions as aesthetic elements, but also influences the attention, perception and emotional response of the audience (Bagherzadeh et al., 2023).

In the context of structured storytelling, the development of digital technology has also caused visual storytelling to shift from linear to more interactive and emotionally oriented storytelling (Ding, 2024; Katerynych et al., 2023). Meanwhile, studies have found that in the streaming media environment, virtual reality and social media, audiences are no longer just passively receiving information but are also involved in the process of experiencing and interpreting content (Zunjic, 2023). For example, studies related to immersive media show that visual storytelling is able to increase the experience of presence, empathy and emotional involvement of the audience (Pecheranskyi, 2023; Zunjic, 2023). Likewise, the development of streaming platforms and OTT content has also changed the structure of traditional storytelling by providing more flexibility in the way a narrative is constructed and delivered (Pandian & M., 2023).

Previous research has also shown that visual storytelling has a great influence on audience engagement. This influence occurs through various mechanisms such as narrative transportation, identification, empathy, and emotional resonance (Gracia et al., 2023; Oblak, 2026; Seidel et al., 2023). For example, the use of appropriate visual and audio elements has been found to increase audience attention, strengthen emotional experiences and influence the way they interact with the content being watched (Bagherzadeh et al., 2023; He, 2024; Yılmaz, 2024). Therefore, visual storytelling is now not only seen as a form of storytelling, but also as a communication mechanism that is able to shape the experience, emotions and engagement of the audience.

Short films as cinematic visual narratives

In general, short films are defined as cinematic audio-visual works that are created by combining narrative elements, mise-en-scène, cinematography, editing and sound to create meaning and experience for the audience (Bordwell et al., 2023). Short films have a shorter watching time but nevertheless have the essential qualities of a cinematic work such as storyline continuity, character development, audio-visual composition and emotional growth (Arifin, 2025; Ding, 2024; Fu, 2024). Recent studies have pointed out that today's short films are no longer just shortened audio-visual content. Instead, short films should be viewed as a cinematic narrative experience that utilizes visual storytelling techniques to construct meaning, to elicit emotions and to influence how audiences interpret things on various digital platforms (Katerynych et al., 2023; Oblak, 2026).

Academics have reached a consensus that short films are different from the usual short-form videos on social media in many aspects such as format, storytelling goal, cinematic composition and audience experience (Fu, 2024; Ding, 2024). Most short-form videos on social media are more focused on information and algorithm-driven visibility, while short films are more focused on story development, character development, emotional appreciation and continuity of audio-visual experience (Gracia et al., 2023; Oblak, 2026). Moreover, modern short films are also frequently experimenting with cross-platform and transmedia storytelling techniques, which enable the audience to interact with the narrative in several digital contexts (Fan, 2024; Katerynych et al., 2023).

Mise-en-scène as a visual storytelling mechanism

Mise-en-scène is a term derived from the French language, which literally means "putting on stage." In film studies, it refers to the arrangement of all visual elements within a film frame (Bordwell et al., 2023). These elements include the setting, props, costumes, make-up, lighting, actor movement, actor positioning (blocking), and spatial composition that collectively create the overall visual appearance of a film (Wikayanto et al., 2023). Mise-en-scène has long been considered to be one of the basic elements of film language as it contributes significantly to the creation of narrative meaning, atmosphere and audience interpretation (Gibbs, 2002). Rather than functioning solely as a visual or aesthetic element, mise-en-scène acts as a visual system that enables filmmakers to construct narrative worlds, communicate symbolic meanings, and influence how audiences perceive and understand a story (Gibbs, 2002).

Barnwell (2022) further explained that mise-en-scène is an important visual storytelling mechanism that helps filmmakers create believable narrative worlds and establish emotional connections between audiences and the stories being presented. Therefore, mise-en-scène should not be viewed merely as a technical or production element, but also as a storytelling strategy that shapes audience experience and interpretation of audio-visual content. For example, the use of specific lighting techniques can create different emotional atmospheres, while colour, spatial arrangement, and actor movement can influence how audiences perceive characters, settings, and narrative situations.

The study of mise-en-scène has been broadened in recent years to indicate its communicative, rhetorical and emotional role. Research has demonstrated that the use of visual elements like space, lighting, colour, composition and actor positioning can

have an impact on how the narrative is interpreted, how we feel and how we engage with the narrative (El-Malky, 2023; Ortiz, 2023). Likewise, studies on the architecture of films and the audio-visual space have shown that spatial design and visual arrangement have a great influence on the audience's attention, emotional experience, and comprehension of the film (Abu-Obeid & Abuhassan, 2023; Gracia et al., 2023). Furthermore, research in digital storytelling indicates that strategically designed visual contexts can enhance emotional impact, foster a sense of realism, and inspire audience engagement (Seidel et al., 2023; Wang & Zhong, 2023).

While there have been many studies on the importance of mise-en-scène in film narration, most prior research has concentrated on the text, film aesthetics, semiotics, and spatial design aspects, as outlined by Abu-Obeid and Abuhassan (2023) as well as Ortiz (2023). Less research has been done on the perception, interpretation, and response of the audience to mise-en-scène, especially in short films distributed via social media. Moreover, the responses of the audience have been studied individually, rather than multidimensional, including cognitive, affective and behavioural aspects. Thus, more investigation is required to comprehend the effect of mise-en-scène, as a visual storytelling mechanism, on audience engagement in contemporary digital viewing environments.

Audience engagement on social media

Audience engagement on social media is defined as the connection that audiences create by interacting, participating, and meaning-making with digital content (Shahbaznezhad et al., 2021). In recent years, engagement has been defined by contemporary scholars as a multidimensional phenomenon, including cognition, emotions, and behaviours in digital environments (Hollebeek et al., 2014; Liadeli et al., 2023). Unlike traditional media audiences, who are typically seen as passive receivers of information, social media audiences are active interpreters, evaluators, and co-creators of meaning, using the affordances of the platforms for commenting, sharing, remixing, and content participation (Hodson & O'Meara, 2023; Shahbaznezhad et al., 2021).

In addition to audience motivations, the recent studies indicate that the level of audience engagement can also be affected by audio-visual storytelling strategies, visual design, narrative structure, and algorithm-driven platform ecosystems (Cong, 2023; Fu, 2024; Schellewald et al., 2026). Consequently, Zuhudi et al. (2025) contended that images are crucial in shaping audience opinion and in the decision-making process. Thus, engagement has become more than just a measure of interaction; it now represents the audience's thinking, feeling, and doing when encountering media content. The current literature is unanimous that audience engagement has three interrelated aspects: cognitive engagement, affective engagement, and behavioural engagement. Cognitive engagement is a process of allocating attention to media content, processing information in the mind, interpreting information, and engaging in thinking about the media content (Achdiyah et al., 2023; Son & Sung, 2022). Affective engagement refers to the emotional resonance, empathy, identification, and emotional attachment that impact audience interpretation and subsequent actions (Fan, 2024; Kelders et al., 2024; Seidel et al., 2023).

Behavioural engagement is a representation of observable actions, including likes, comments, sharing, following, and content participation, that serve as indicators of audience engagement in social media environments (Hiromori, 2023; Tsai, 2026; Wu

& Yan, 2026). Engagement is a multidimensional concept, but its measurement and limits are controversial. While some studies still use behavioural metrics as their main measures, others believe that observable interactions are not sufficient to capture the cognitive and emotional experience audiences have (Akarsu & Sever, 2023; Zhang & Qiu, 2025). Hence, the debates illustrate the need to adopt a broader framework when contemplating how audiences engage with digital media.

Although there has been a surge in research on social media engagement, the majority of the existing studies have been limited to influencer marketing, live streaming, educational content, virtual communities, and general short-form videos (Alim et al., 2025; Su, 2025). However, limited research has been conducted to explore audience engagement in short films using cinematic storytelling in social media. Moreover, previous research tended to investigate cognitive, affective and behavioural engagement separately, and thus created a disjointed knowledge of the processes of audience engagement (Md Nasir et al., 2024; Stenberg & Switek, 2023). This study uses the multidimensional conceptualization of audience engagement to analyse the cognitive, affective and behavioural engagement of the audience in short films that are being distributed through social media. Therefore, it is expected that mise-en-scène will have a different impact on each dimension of engagement, as it acts as a visual storytelling tool, evokes emotional resonance, and stimulates participatory action. Based on this, the following hypotheses are proposed:

H1: Mise-en-scène in short films positively influences audiences' cognitive engagement on social media.
H2: Mise-en-scène in short films positively influences audiences' affective engagement on social media.
H3: Mise-en-scène in short films positively influences audiences' behavioural engagement on social media.

Underpinning theory: Visual Rhetoric Theory

The Visual Rhetoric Theory (VRT), founded by Foss (1994), provides a perspective on how visual elements are used persuasively to create meaning, shape interpretation, and elicit audiences' responses. According to Foss (1994), visual rhetoric is the symbolic use of visual images and forms to communicate ideas, evoke feelings, and persuade audiences.

This view is further broadened by more recent scholarship, which sees visual communication as a complex process that involves the creation, organization and interpretation of visual artifacts in various social and media settings (Miles, 2023). The application of VRT in film studies is particularly significant because film elements serve not only as aesthetic devices but also as persuasive visual signs that contribute to the narrative's meaning and the audience's interpretation. This underlines the idea that visual elements should not be used as mere visual aesthetics and instead as semiotic devices that influence the audience's reception, trust, and identification (Zuhudi et al., 2025). The concept of mise-en-scène has been used by classical film scholars to describe how filmmakers use the visual language to convey atmosphere, symbolism, emotion, and narrative intent (Bordwell et al., 2023; Gibbs, 2002; Monaco, 2009).

Likewise, Barnwell (2022) highlighted the visual design and production aspects as mechanisms of visual storytelling that affect the audience's perception and emotional

involvement. Recent research also indicates that the use of visual composition, human imagery, and audio-visual design can effectively attract attention, evoke emotions, and stimulate audience participation in digital media environments (Hubbes, 2022; Wang et al., 2023; Xu & Shanat, 2024). Thus, VRT offers a suitable theoretical basis for the present study as it helps in understanding the meaning of symbolic and aesthetic aspects of mise-en-scène as persuasive visual cues that affect cognitive, affective and behavioural engagement. This theory treats mise-en-scène in short films as visual "rhetorical artifacts" and provides a suitable framework for analysing the role of visual storytelling techniques in audience engagement in the current social media landscape.

Conceptual framework

This study suggests that intentional utilization of mise-en-scène in short films serves as a visual storytelling strategy that may influence audience cognitive, emotional, and behavioural engagement. Based on the Visual Rhetoric Theory (VRT), the conceptual framework presented in Figure 1 demonstrates the proposed relationships between mise-en-scène and the multidimensional aspects of audience engagement.

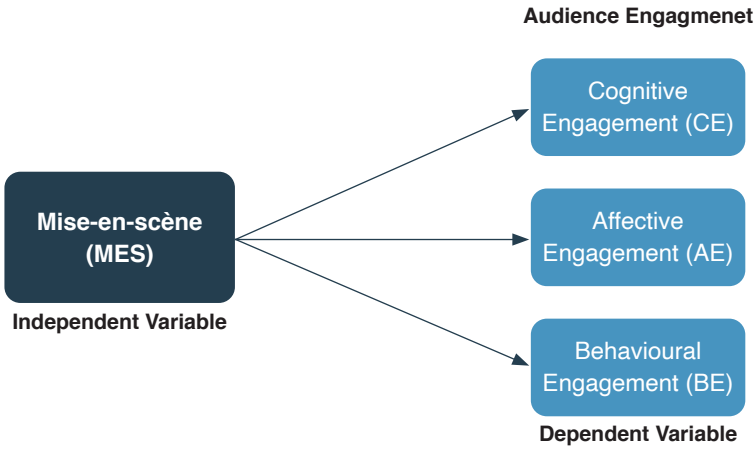

Figure 1. Conceptual framework

METHODOLOGY

Research design

This study employed a quantitative design with a cross-sectional survey approach to assess the influence of mise-en-scène in short films on audience engagement on social media. This design was chosen as it allows systematic empirical data collection to test the relationship between variables, particularly cinematic elements, visual presentation, and dimensions of audience engagement in the context of social media.

Sampling and data collection techniques

The survey sample consisted of 300 Malaysian social media users aged between 18 and 35 years who frequently watched short films on social media. For this study, short films are defined as short-form audio-visual narratives using conventions typically associated with cinematic storytelling (e.g., narrative, character development, and visual composition including mise-en-scène). Although respondents were briefed

on this conceptual distinction and provided with examples prior to completing the questionnaire, the study did not implement a mechanism to formally verify that this distinction was consistently maintained throughout the survey process, a limitation consistent with prior self-report-based engagement research that relies on participants' subjective recall of their viewing experiences rather than controlled stimulus exposure (Mirbagheri & Najmi, 2019). Therefore, the operational scope of this study is best understood as capturing user perceptions of mise-en-scène across short-form narrative videos encountered organically on social media platforms, rather than assuming strict respondent-level differentiation between cinematic short films and unstructured short-form videos (Fu, 2024; Ding, 2024).

A non-probability purposive sampling technique was employed to recruit respondents who met the following criteria: (1) aged between 18 and 35 years, (2) active social media users, and (3) experienced in watching short films on social media platforms. Prior to completing the questionnaire, respondents were provided with brief explanations and examples of short films and mise-en-scène to establish a common conceptual understanding. Respondents subsequently evaluated mise-en-scène based on their cumulative viewing experiences rather than a single controlled viewing stimulus. The minimum sample size (N=119) was determined using G*Power with a medium effect size ($f^2 = 0.15$), a significance level of 0.05, and a statistical power of 0.95. Data were collected online through Google Form that was distributed via WhatsApp, Telegram, and email.

Instrument and measurement

The research instrument was developed by adapting and modifying measurement items from previously validated studies that were conceptually aligned with the constructs investigated in this study. The questionnaire comprised 17 items measuring four constructs as presented in Table 1. All items were measured using a seven-point Likert scale ranging from 1 (strongly disagree) to 7 (strongly agree). Prior to the main data collection, the instrument underwent expert review, pre-testing, and pilot testing to ensure content validity, clarity, and comprehensibility. The pilot test results demonstrated acceptable reliability for all constructs (Cronbach Alpha > 0.70) (Hair et al., 2022).

Table 1. Measurement instruments

Construct	Source	Number of Items	Cronbach's Alpha
Mise-en-Scène (MES)	Ekhato (2024)	5	0.899
Cognitive Engagement (CE)	Mirbagheri & Najmi (2019)	4	0.925
Affective Engagement (AE)	Mirbagheri & Najmi (2019)	4	0.978
Behavioural Engagement (BE)	Mirbagheri & Najmi (2019)	4	0.902

Note: Cronbach's alpha values reported in Table 1 refer to pilot testing results

FINDINGS

Descriptive profile

As presented in Table 2, the respondents comprised a diverse group of active social media users aged between 18 and 35 years, with a relatively balanced gender

distribution, although the sample skewed towards younger respondents (18–20 years). The respondents demonstrated varying levels of exposure to short films on social media, with TikTok emerging as the most frequently used platform, followed by YouTube and Instagram. Most respondents did not possess formal educational backgrounds in film or media studies, indicating that the findings primarily reflect the perceptions and engagement behaviours of general social media audiences.

Table 2. Demographic profile of respondents

Demographic	Frequency	Percentage (%)
Gender		
Male	132	47.1
Female	148	52.9
Age		
18–20 years	153	54.6
21–24 years	58	20.7
25–29 years	64	22.8
30 years and above	5	1.9
Short Film Watching Frequency		
Rarely (less than once a week)	99	35.4
Sometimes (a few times a week)	102	36.4
Often (once or more daily)	79	28.2
Primary Social Media Platform for Watching Short Films		
TikTok	136	48.6
Facebook	12	4.3
Instagram	45	16.1
YouTube	65	23.2
Others	22	7.9
Educational Background in Film/Media		
Yes	38	13.6
No	242	86.4

Data analysis

From the initial 300 responses received, only 280 responses were accepted as suitable for the study. After a thorough data validation procedure that included removing outliers, straight-lining, and screening for missing data, 20 responses were eliminated. For this study, the partial least squares (PLS) method was used, and the analysis was conducted using the SmartPLS version 4.0. Structural equation modelling (SEM) was used to evaluate the measurement and structural models. The sample was determined to be adequate, based on Hair et al. (2022), suitable for small to medium size, especially in the presence of sophisticated models. The measurement model was used to assess the validity and reliability of the constructs and the structural model was used to test the hypothesized paths, following the standards set by Hair et al. (2022) and Sarstedt et al. (2014).

Measurement model

Given the quantitative nature of the research, it is often recommended to use Cronbach's α to ensure the construct's reliability. Furthermore, in structural equation modelling, the internal consistency of constructs is analysed using Composite Reliability (CR), as suggested by Fornell & Larcker (1981) and further supported by Hair et al. (2022), allowing for a more precise estimation. Therefore, the two validity categories that are discussed are discriminant validity and convergent validity.

Convergent validity

As indicated by Hair et al. (2019), the convergent validity of the measurement model was tested using factor loadings, Average Variance Extracted (AVE), and Composite Reliability (CR). Figure 2 shows that all factor loadings exceeded the threshold value of 0.70, in keeping with Hair et al.'s (2019) guidelines, thereby supporting the convergent validity of the constructs.

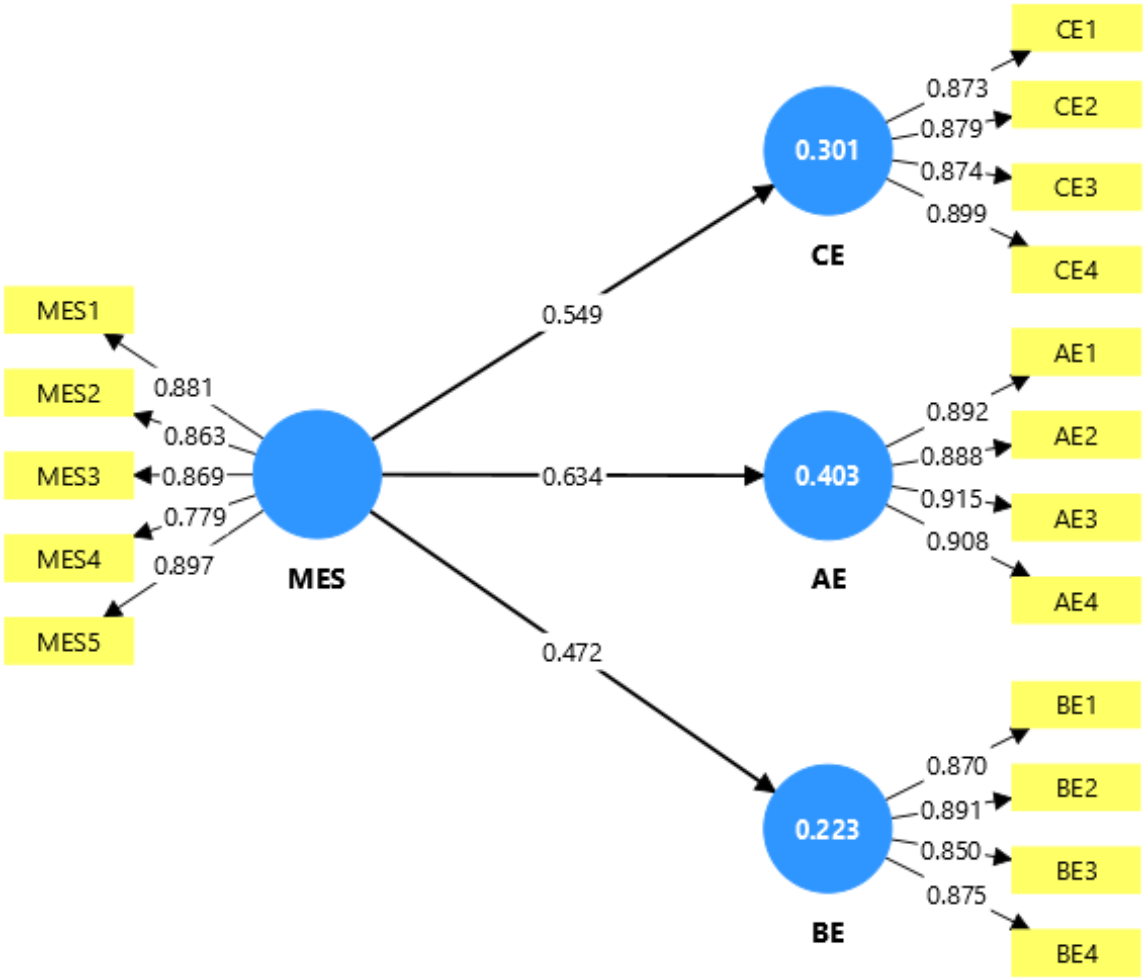

Figure 2. Measurement model

The measurement model was assessed in terms of collinearity, reliability, and convergent validity. As shown in Table 3, first, the variance inflation factor (VIF) ranged from 1.823 to 3.477, which are below the recommended threshold of 5.0 (Hair et al., 2022), indicating no multicollinearity issues. Next, the constructs demonstrated

satisfactory internal consistency reliability, with composite reliability (CR) values ranging from 0.927 to 0.945, exceeding the minimum cut-off of 0.70. In addition, the average variance extracted (AVE) values ranged from 0.738 to 0.811, surpassing the recommended threshold of 0.50 (Fornell & Larcker, 1981), thereby confirming adequate convergent validity. Overall, the results show that the measurement model indicates acceptable levels of reliability and validity.

Table 3. Results of measurement model

Construct	Item	Loading	VIF	Cronbach Alpha	CR	AVE
Mise-en-scène (MES)	MES1	0.881	2.984	0.910	0.933	0.738
	MES2	0.863	2.984			
	MES3	0.869	2.877			
	MES4	0.779	1.977			
	MES5	0.897	3.271			
Cognitive Engagement (CE)	CE1	0.873	2.194	0.905	0.933	0.777
	CE2	0.879	2.829			
	CE3	0.874	3.007			
	CE4	0.899	3.042			
Affective Engagement (AE)	AE1	0.892	2.958	0.922	0.945	0.811
	AE2	0.888	2.803			
	AE3	0.915	3.477			
	AE4	0.908	3.435			
Behavioural Engagement (BE)	BE1	0.870	3.312	0.897	0.927	0.760
	BE2	0.891	3.392			
	BE3	0.850	1.823			
	BE4	0.875	2.756			

Note: CE1 was subsequently removed from the final structural model following HTMT assessment (see Table 4); values reported here reflect the initial measurement model prior to item deletion.

Discriminant validity

Discriminant validity refers to how much an item differs from another construct. According to Fornell & Larcker (1981), it is evaluated by comparing possible overlapping constructs.

Heterotrait-Monotrait Ratio (HTMT)

The construct's discriminant validity was evaluated using the Heterotrait-Monotrait ratio of correlations (HTMT). All of the HTMT values in this study fell between 0.500 and 0.883, which is below the cut-off point suggested by Kline (2023) and Henseler et al. (2015). This indicates that the discriminant validity of the components is adequate. It is essential to note that one indicator from the Cognitive Engagement construct (CE1) was excluded, as its inclusion resulted in an HTMT value exceeding 0.90, indicating a potential threat to discriminant validity. After refining the model, the HTMT results in Table 4 indicate strong evidence that the constructs in this study are empirically distinct.

Table 4. Heterotrait-monotrait ratio (HTMT)

HTMT	AE	BE	CE	MES
AE				
BE	0.822			
CE	0.883	0.838		
MES	0.691	0.500	0.529	

Note: HTMT values below 0.90 indicate acceptable discriminant validity.
Item CE1 was deleted due to HTMT.

The Fornell and Larcker criterion

According to Fornell & Larcker (1981), the average variance shared between each construct and its measure should be greater than the variance shared between the constructs and other constructs. Table 5 shows the Fornell and Larcker criterion, which indicates that the square root of the AVE (as shown in bold values on the diagonals) was greater than the corresponding row and column values, demonstrating satisfactory discriminant validity.

Table 5. Fornell and Larcker criterion

Construct	AE	BE	CE	MES
AE	**0.901**			
BE	0.763	**0.872**		
CE	0.803	0.751	**0.911**	
MES	0.634	0.472	0.483	**0.859**

Note: Bold italic values on the diagonal represent the square root of AVE.
Item CE1 was deleted due to HTMT

Cross-loading

Additionally, according to Hair (2014), discriminant validity can also be assessed by evaluating the cross-loadings of indicators. Specifically, an indicator should exhibit a higher outer loading on its corresponding construct compared to its loading on other constructs. As shown in Table 6, all remaining items loaded more strongly on their respective constructs than on any other constructs, thereby confirming the presence of discriminant validity among the constructs.

Table 6. Loadings and cross-loadings

Construct	AE	BE	CE	MES
AE1	0.892	0.701	0.770	0.558
AE2	0.888	0.645	0.687	0.579
AE3	0.915	0.690	0.705	0.593
AE4	0.908	0.714	0.734	0.554
BE1	0.596	0.870	0.672	0.331
BE2	0.604	0.891	0.637	0.355
BE3	0.736	0.850	0.627	0.525
BE4	0.678	0.875	0.689	0.376

Table 6. (con't)

Construct	AE	BE	CE	MES
CE2	0.695	0.684	0.908	0.443
CE3	0.735	0.710	0.911	0.397
CE4	0.763	0.664	0.914	0.474
MES1	0.571	0.466	0.467	0.882
MES2	0.517	0.375	0.368	0.864
MES3	0.524	0.373	0.410	0.869
MES4	0.524	0.388	0.376	0.778
MES5	0.581	0.418	0.443	0.897

Note: Item CE1 was deleted due to HTMT assessment

Structural model evaluation

Following the measurement model assessment, the structural model was evaluated to examine the predictive relationships among the constructs. A bootstrapping procedure with 10,000 resamples was conducted using SmartPLS 4.0 (Ringle et al., 2015), as recommended by Hair et al. (2022), to ensure robust standard errors and confidence intervals. All constructs in the research model of this study are multi-item constructs conceptualized as reflective.

Collinearity assessment

Collinearity was assessed using the Variance Inflation Factor (VIF) to ensure that predictor constructs did not exhibit multicollinearity issues. The VIF values in this study are 1.000 for all constructs, which is well below the recommended threshold of 3 (Hair et al., 2019). These results confirm that collinearity is not a concern in the structural model.

Path coefficient (Hypothesis testing)

The results shown in Table 7 reveal that all hypothesized relationships are significant. Specifically, mise-en-scène (MES) has a significant positive effect on cognitive engagement, affective engagement and behavioural engagement (BE). Since the bias-corrected confidence intervals for all relationships did not include zero, H1, H2, and H3 were supported. The relationship between mise-en-scène and affective engagement demonstrated the strongest direct effect among the three dimensions of audience engagement. These findings suggest that audiences respond most strongly to the emotional and experiential qualities of cinematic visual storytelling in short films on social media platforms.

Table 7. Results of structural model analysis (hypotheses testing)

Hypothesis	Relationship	Beta	SE	T Value	P Value	BCI LL	BCI UL	Decision
H1	MES → CE	0.483	0.040	11.993	0.000	0.420	0.552	Supported
H2	MES → AE	0.634	0.033	19.412	0.000	0.582	0.690	Supported
H3	MES → BE	0.472	0.042	11.288	0.000	0.406	0.545	Supported

Note: Bootstrapping was performed using 10,000 resamples with 95% bias-corrected confidence intervals.

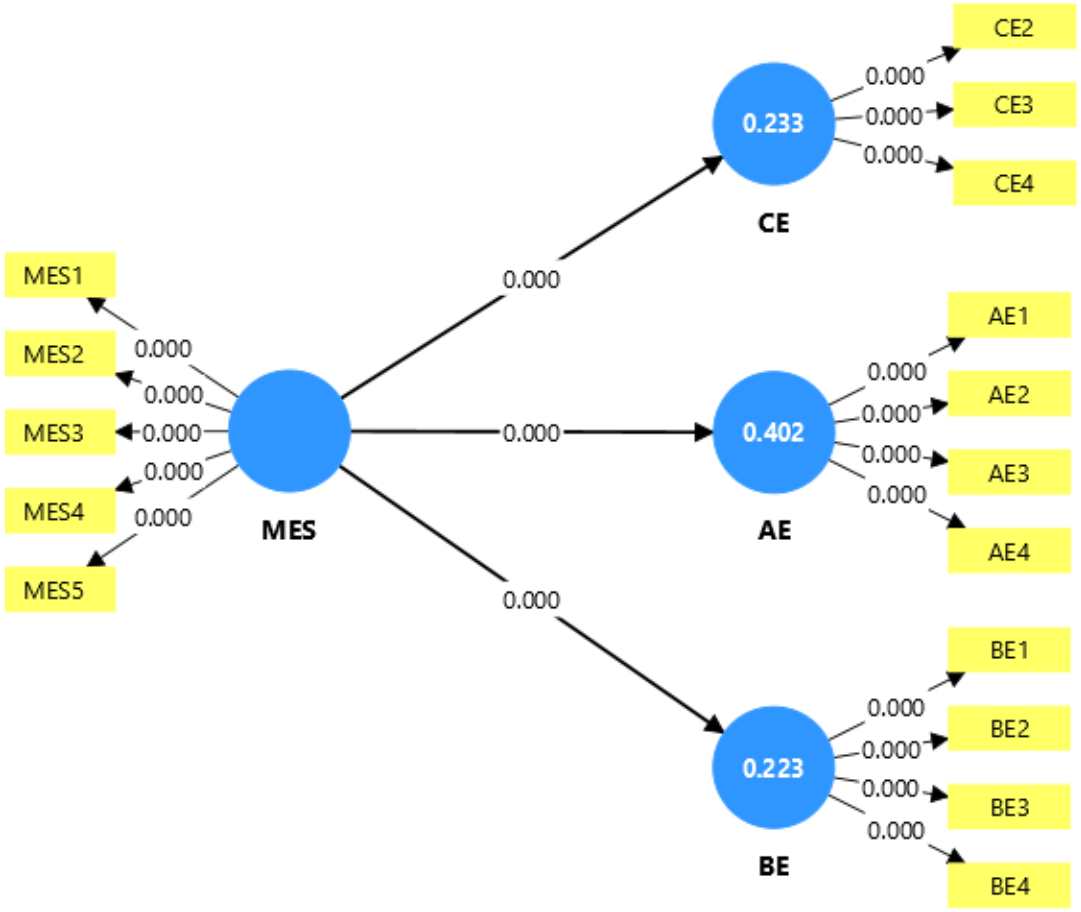

Figure 3. Structural model

Predictive power assessment

The predictive power of the structural model was evaluated using PLSpredict with 10-fold cross-validation and 10 repetitions (Hair et al., 2022; Shmueli et al., 2019). The results in Table 8 show that all indicators yielded positive Q^2 predict values, ranging from 0.098 to 0.347, which exceed zero and thus, confirming the positive predictive relevance of the proposed model.

Table 8. Predictive power assessment

Items	Q^2predict	PLS-SEM_RMSE	LM_RMSE
AE1	0.304	0.997	1.010
AE2	0.330	0.973	0.993
AE3	0.347	0.973	0.985
AE4	0.302	1.031	1.035
BE1	0.098	1.717	1.716
BE2	0.118	1.595	1.593
BE3	0.257	1.178	1.175
BE4	0.134	1.439	1.443
CE2	0.192	1.261	1.270
CE3	0.152	1.339	1.347
CE4	0.219	1.255	1.261

When comparing the root mean squared error (RMSE) values between PLS-SEM and the linear benchmark (LM), most indicators (e.g., AE1–AE4, CE2–CE4) demonstrated equal or lower RMSE values under PLS-SEM than LM, indicating adequate out-of-sample predictive accuracy. However, a few items, such as BE1–BE2), displayed marginally higher errors than LM, suggesting relatively weaker predictive accuracy on those indicators. Overall, the results show that the proposed model has satisfactory predictive power and most of the PLS-SEM indicators have a better or equal performance compared to the LM benchmark. The findings also provide further evidence of the strength of the proposed model in explaining audience engagement in the short film context of social media.

Evaluating effect size

Table 9 shows that the R^2 values of cognitive engagement, affective engagement, and behavioural engagement are 0.233, 0.402, and 0.223, respectively. All of these values are acceptable based on the cut-off criteria suggested by Cohen (1988). Then, the effect size (f^2) analysis shows that the effect of mise-en-scène was moderate for cognitive engagement ($f^2 = 0.305$), behavioural engagement ($f^2 = 0.287$), and large for affective engagement ($f^2 = 0.674$). This discovery indicates that affective engagement is the strongest pathway by which mise-en-scène affects audience reactions. The medium to large effect sizes suggests that mise-en-scène is a significant predictor, not a minor visual element, in influencing audience engagement.

Table 9. Evaluating effect size

	Hypothesis	R^2	f^2	Decision
	Cognitive Engagement	0.233		
	Affective Engagement	0.402		
	Behavioural Engagement	0.223		
H1	Mise-en-scène → Cognitive Engagement		0.305	Medium
H2	Mise-en-scène → Affective Engagement		0.674	Large
H3	Mise-en-scène → Behavioural Engagement		0.287	Medium

Note: f^2 thresholds: 0.02 = small, 0.15 = medium, and 0.35 = large.

DISCUSSION

The results indicate that mise-en-scène can have a significant effect on audience engagement with social media short films, suggesting that the visual elements of a film can serve as visual storytelling devices as well as aesthetic elements. Given the brevity of social media feeds and the need for a shorter story, audiences seem to be heavily dependent on visuals to help them understand, connect with, and interact with content. The results corroborate the idea that the interaction between the audience and short films is multidimensional, involving cognitive, affective, and behavioural reactions. Beyond confirming that these relationships exist, it is important to explain why mise-en-scène generates this pattern of differentiated effects across the three engagement dimensions, which reflects distinct underlying psychological processing mechanisms rather than a uniform response to visual stimuli, consistent with VRT's premise

that visual elements operate as multi-layered persuasive devices capable of shaping cognition, emotion, and behaviour through different rhetorical pathways (Foss, 1994).

First, mise-en-scène showed a significant positive relationship with cognitive engagement ($\beta = 0.483$), indicating that viewers rely on visual elements of the film to process and interpret the information in the story when viewing it in a short-form setting. The effect size was moderate ($f^2 = 0.305$), suggesting that mise-en-scène is a meaningful, though not the most dominant, factor in the construction of visual meaning and comprehension of the story. The findings are consistent with previous studies demonstrating that visual storytelling enhances audience attention, interpretation, and comprehension (Dite, 2023; Huang et al., 2023; Williams, 2019). In the perspective of VRT, visual elements are used as persuasive signs that influence the interpretation and cognitive response of the audience (Foss, 1994). This moderate rather than dominant effect can be explained by the fact that cognitive engagement requires audiences to actively decode and interpret visual cues as rhetorical signs, a process that demands conscious interpretive effort rather than immediate apprehension (Foss, 1994). Within the compressed viewing time typical of social media consumption, such deliberate processing is inherently slower and more effortful than automatic affective responses, which may explain why mise-en-scène's influence on cognitive engagement, while significant, remains less pronounced than its influence on affective engagement (Huang et al., 2023).

Second, mise-en-scène was found to have the strongest influence on affective engagement, both in terms of direct relationship ($\beta = 0.634$) and effect size ($f^2 = 0.674$), indicating that this is the most significant mechanism by which visual storytelling in cinema affects audience engagement. These results indicate that emotional processing is the most dominant pathway through which cinematic storytelling shapes audience engagement, more so than its influence on cognitive interpretation or behavioural participation. Moreover, these findings suggest that affective audience responses are influenced not only by narrative content but also by visual atmosphere, symbolic imagery, colour composition, and spatial arrangement. This discovery aligns with prior research that has shown the emotional impact and immersive qualities of visual design in movies (Astuti et al., 2024; Liu, 2024; Sinnerbrink, 2021; Wang et al., 2021; Wong et al., 2025).

In such social media contexts where the consumption of visual information is rapid, emotional resonance can thus serve as an important tool for maintaining the attention of the audience and deepening their engagement (Kennedy-Karpat, 2022; Vardeman, 2024). This pattern can be explained by the nature of affective processing itself, which tends to operate rapidly and automatically, often preceding deliberate cognitive appraisal, consistent with VRT's contention that visual imagery can evoke emotional responses independent of explicit verbal or narrative reasoning (Foss, 1994). Visual cues such as lighting, colour and spatial composition are capable of triggering an immediate emotional appraisal before the audience consciously interprets narrative meaning, allowing affective responses to form ahead of, and independently from, cognitive elaboration (Sinnerbrink, 2021). Given that short-form social media content offers only a brief viewing window, this capacity for rapid affective activation likely accounts for why mise-en-scène exerts its strongest influence through the emotional pathway rather than the cognitive one (Yılmaz, 2024).

Third, the results show that mise-en-scène has a significant effect on behavioural engagement, suggesting that the visual storytelling in film can go beyond interpretation and emotional response to the audience to evoke their participation. Visually engaging and emotionally resonant short films seem to be more likely to be liked, commented on, shared, and interacted with. This is in line with other research that has focused on the importance of visual storytelling to encourage audience participation in digital environments (de Oliveira Santini et al., 2020; Liu et al., 2021). The effect size for behavioural engagement ($f^2 = 0.287$) was not as high as that for affective engagement but still shows that mise-en-scène makes a significant contribution to audience participation behaviour. The results also corroborate the hypothesis that visually persuasive content can increase audience engagement and content visibility in today's attention economy (Hernández-Santaolalla & Barrientos-Bueno, 2020; Munaro et al., 2021).

This finding can be explained through VRT, in which persuasive visual elements function not merely as interpretive or emotional triggers but as rhetorical appeals capable of motivating audience action, much as visual rhetoric has been shown to prompt participation and response in other persuasive contexts, such as user-generated tourism imagery (Bakri et al., 2022) and political visual communication (Miles, 2023). When mise-en-scène generates cognitively and emotionally engaging visual experiences, audiences may also be more inclined to extend their engagement through participatory behaviours such as liking, commenting, and sharing that is consistent with the persuasive function that visual rhetoric plays in shaping audience response (Foss, 1994). Because behavioural engagement may require an additional step beyond perceptual and emotional response, its effect size may be somewhat lower than that of affective engagement, yet still meaningfully higher than would be expected from cognitive processing alone (Liu et al., 2021).

Theoretically, the results offer empirical evidence to support VRT that mise-en-scène is a persuasive visual system that can affect the cognition, emotion, and behaviour of the audience at the same time. More importantly, the findings reveal that affective engagement stood out consistently on both metrics, recording the strongest direct relationship and the largest effect size among the three dimensions. This suggests that emotional processing is the primary pathway by which visual storytelling in film affects the audience, more so than its cognitive or behavioural pathways. This finding complements previous visual storytelling and audience engagement research by showing that the persuasive effect of the visual elements in social media short films is not only the ability to convey meaning, but also to evoke emotions that enhance the overall audience engagement (Bakri et al., 2022; Martikainen & Sakki, 2023; Mirbagheri & Najmi, 2019).

Taken together, this hierarchy of effects, with affective engagement being the strongest, followed by cognitive and then behavioural engagement, suggests that rapid emotional appraisal may play a particularly prominent role alongside subsequent interpretive and participatory responses, consistent with VRT's view of visual persuasion as a layered process moving from perception to emotional and behavioural response (Foss, 1994). This explains why emotional resonance, rather than narrative comprehension alone, functions as the primary channel through which cinematic visual storytelling translates into audience engagement on social media (Martikainen & Sakki, 2023).

CONCLUSION

The results of this study show that the visual elements of the film (mise-en- scene) have an impact on the audience's engagement in cognitive, affective, and behavioural aspects, so that the application of visual elements in film is not just for aesthetic purposes but also as a means of creating meaning, evoking emotions, and involving the audience. Emotional processing (affective engagement) showed both the strongest direct relationship and the largest effect size, indicating that the emotional pathway of cinematic visual storytelling exerts the strongest influence on audience responses. The results also confirm that mise-en-scène remains persuasive in today's social media settings where narratives are compressed and attention spans are short.

This research will add to the literature by extending the use of VRT to the context of the short film in the social media era and by placing mise-en-scène as a strategic visual storytelling tool instead of just an aesthetic element in making short films. The results also help to extend the knowledge of audience engagement as a multi-faceted phenomenon that encompasses cognitive, affective, and behavioural engagements. This research offers cinematic visual storytelling strategies for filmmakers, content creators, digital marketers and media educators to enhance the attention, emotion and participative behaviour of the audience in the present attention-driven digital media era.

Limitations

Despite its contributions, this study has several limitations. This study was conducted with young adult social media users in Malaysia; thus, results may not be applicable to other age groups and cultural contexts. Additionally, this study relied on respondents' self-reported perception of mise-en-scène across their general viewing experience rather than a single controlled viewing stimulus. This design was chosen to preserve ecological validity by capturing engagement with the diverse range of short films encountered in naturalistic social media settings; however, it also means that the reported relationships reflect associations between perceived constructs rather than causal effects of a specific film stimulus.

Future research

Future studies might utilize a more representative sample of diverse groups, cultural settings, and social media platforms to increase generalizability of results. Experimental and longitudinal research designs can also provide insights into causal mechanisms and temporal dynamics of audience engagement. Comparative studies that examine the cinematic short film and the general short-form social media videos would further clarify the unique role of cinematic storytelling in the audience's response. Further research could also explore how other film aspects, including cinematography, editing, sound design, and visual effects, affect audience engagement, thereby enhancing the understanding of the mechanisms of audience engagement in the current digital storytelling context.

Open Access: This article is distributed under the terms of the Creative Commons Attribution License (CC-BY 4.0) which permits any use, distribution and reproduction in any medium, provided the original author(s) and the source are credited.

References

Abu-Obeid, M., & Abuhassan, A. (2023). Experiencing cinematic architecture: The impact of architecture on the audience emotional engagement. *International Journal of Architectural Research (Archnet-IJAR), 17*(3), 92–108.

Achdiyah, H. N., Latipun, L., & Yuniardi, M. S. (2023). The influence of social support on academic performance: The mediating role of cognitive engagement. *Jurnal Ilmiah Psikologi Terapan, 11*(2), 85–90. https://doi.org/10.22219/jipt.v11i2.22651

Akarsu, H., & Sever, N. S. (2023). Advertising engagement: Conceptualization, scale development and validation. Fonseca, *Journal of Communication, 26*, 283–301.

Alim, M. A., Thaichon, P., Quach, S., & Weaven, S. (2025). Influencer–follower interactions and consumers' behavioral responses: A multi-method approach and future research agenda. *Journal of Consumer Behaviour, 25*(1), 3–40. https://doi.org/10.1002/cb.70056

Arifin, A. (2025). The five stations of artistry in film narrative. *SEARCH Journal of Media and Communication Research, 17*(2), 159–173. DOI: 10.58946/search-17.2.P10

Astuti, S. Y., Wijaya, N. P., & Wajihuddin, W. (2024). The role of mise-en-scène in visualizing discrimination scenes in Miracle in Cell No. 7. *International Journal of Social Science and Human Research, 7*(1), 352–355.https://doi.org/10.47191/ijsshr/v7-i01

Bagherzadeh, M., Sanati, E., & Naghipour, M. (2023). Exposing the world through Emanuel Lubezki's method. *CINEJ Cinema Journal, 11*(1), 193–215. https://doi.org/10.5195/cinej.2023.447

Bakri, M., Krisjanous, J., & Richard, J. (2022). Examining sojourners as visual influencers in VFR (visiting friends and relatives) tourism: A rhetorical analysis of user-generated images. *Journal of Travel Research, 62*(8), 1685–1706. https://doi.org/10.1177/00472875221138975

Barnwell, J. (2022). *Production design for screen: Visual storytelling in film and television* (2nd ed.). Bloomsbury Visual Arts.

Bordwell, D., Thompson, K., & Smith, J. (2023). *Film art: An introduction* (13th ed.). McGraw Hill.

Cohen, J. (1988). *Statistical power analysis for the behavioral sciences* (2nd ed.). Lawrence Erlbaum Associates.

Cong, J. (2023). The impact of digital technology on the storytelling of contemporary journalism. *Media and Communication Research, 4*(5), 16–20. https://doi.org/10.23977/mediacr.2023.040503

de Oliveira Santini, F., Ladeira, W. J., Pinto, D. C., Herter, M. M., Sampaio, C. H., & Babin, B. J. (2020). Customer engagement in social media: A framework and meta-analysis. *Journal of the Academy of Marketing Science, 48*, 1211–1228. https://doi.org/10.1007/s11747-020-00731-5

Ding, Y. (2024). Interactive narratives and immersive experiences: A brief discussion on the creative logic of interactive film and television works. *Communications in Humanities Research, 26*(1), 236–243. https://doi.org/10.54254/2753-7064/26/20232074

Dite, S. A. (2023). *Representasi identitas Jawa pada cerita Maya (Film Maya Daya Raya) melalui analisis unsur sinematik: Mise en scene* [Representation of Javanese identity in Maya stories (Film Maya Daya Raya) through analysis of cinematic elements: Mise en scene]. *Tonil Jurnal Kajian Sastra Teater Dan Sinema, 20*(1), 8–20. https://doi.org/10.24821/tnl.v20i1.9336

Ekhato, E. Z. (2024). Stylistics and setting mise en scène in television: Examining their impact on audience aesthetic appreciation. *Nigerian Journal of Arts and Humanities (NJAH), 4*(1).

El-Malky, A. (2023). Allusions in film subtitles: Interaction between verbal and non-verbal contexts. *Transcultural Journal of Humanities and Social Sciences, 4*(2), 1–26.

Fan, W. (2024). Remediated memory, digital witnessing and engagement: A qualitative analysis of the interactive documentary *The Space We Hold*. *Global Media and China, 10*(1), 94–111. https://doi.org/10.1177/20594364241236909

Fornell, C., & Larcker, D. F. (1981). Evaluating structural equation models with unobservable variables and measurement error. *Journal of Marketing Research, 18*(1), 39–50. https://doi.org/10.1177/0022243781018001

Foss, S. K. (1994). A rhetorical schema for the evaluation of visual imagery. *Communication Studies, 45*(3–4), 213–224. https://doi.org/10.1080/10510979409368425

Fu, J. (2024). Blurring the lines: Feature news videos and documentaries in a new digital age. *Communications in Humanities Research, 39*(1), 70–77. https://doi.org/10.54254/2753-7064/39/2024219

Gibbs, J. (2002). *Mise-en-scène: Film style and interpretation*. Wallflower Press.

Gracia, M. J. B., Damas, S. H., & Reis, A. B. (2023). Immersive journalism in times of lockdowns. *IC Revista Científica de Información y Comunicación, 20*, 77–100.

Hair, J. F. (2014). *A primer on partial least squares structural equation modeling* (PLS-SEM). SAGE Publications.

Hair, J. F., Hult, G. T. M., Ringle, C. M., & Sarstedt, M. (2022). *A primer on partial least squares structural equation modeling (PLS-SEM)* (3rd ed.). SAGE Publications.

Hair, J. F., Risher, J. J., Sarstedt, M., & Ringle, C. M. (2019). When to use and how to report the results of PLS-SEM. *European Business Review, 31*(1), 2–24.

He, Z. (2024). Crossing boundaries: Shock effect, optical unconscious and Messianic time in Theo Angelopoulos's cinematic language. *Art and Society, 3*(1), 60–68. https://doi.org/10.56397/as.2024.02.05

Henseler, J., Ringle, C. M., & Sarstedt, M. (2015). A new criterion for assessing discriminant validity in variance-based structural equation modeling. *Journal of the Academy of Marketing Science, 43*(1), 115–135. https://doi.org/10.1007/s11747-014-0403-8

Hernández-Santaolalla, V., & Barrientos-Bueno, M. (Eds.). (2020). *Handbook of research on transmedia storytelling, audience engagement, and business strategies*. IGI Global. https://doi.org/10.4018/978-1-7998-3119-8

Hiromori, T. (2023). Unlocking effective language learning: The crucial role of engagement and its multifaceted components. *Current Research in Psychology and Behavioral Science (CRPBS), 4*(4), 1095. https://doi.org/10.54026/crpbs/1095

Hodson, J., & O'Meara, V. (2023). Curating hope: The aspirational self and social engagement in early-onset cancer communities on social media. *Social Media and Society, 9*(3). https://doi.org/10.1177/20563051231196868

Hollebeek, L. D., Glynn, M. S., & Brodie, R. J. (2014). Consumer brand engagement in social media: Conceptualization, scale development and validation. *Journal of Interactive Marketing, 28*(2), 149–165. https://doi.org/10.1016/j.intmar.2013.12.002

Huang, X., Li, X., & Yao, J. (2023). Investigating the role of visual storytelling in enhancing audience engagement in digital journalism. *Medaad, 2023*, 10–16.

Hubbes, L. A. (2022). Recombinant revelations: 2012 in millenarian and new age cyber-apocalypticism. *Traditiones 50*(3), 75–97. https://doi.org/10.3986/traditio2021500304

Hui, S., & Yang, T. (2023). Digital film and television special effects production based on virtual reality technology. *Computer-Aided Design and Applications, 20*(S13), 98–110. https://doi.org/10.14733/cadaps.2023.S13.98-110

Ilmaranta, K. (2023). Toward production design metaphor: Implications of situated authorship and meaning-making. *Baltic Screen Media Review, 11*(1), 26–47. https://doi.org/10.2478/bsmr-2023-0003

Katerynych, P., Goian, V., & Goian, O. (2023). Exploring the evolution of storytelling in the streaming era: A study of narrative trends in Netflix original content. *Communication Today, 14*(2), 28–41. https://doi.org/10.34135/communicationtoday.2023.vol.14.no.2.3

Kelders, S. M., Kip, H., Jong, N. B., & Köhle, N. (2024). What does it mean to be engaged with digital health interventions? A qualitative study into the experiences of engaged users and the views of professionals. *Digital Health*. https://doi.org/10.1177/20552076241283530

Kennedy-Karpat, C. (2022). Teaching L'Opéra-Mouffe (1958). *Short Film Studies, 12*(1), 97–104. https://doi.org/10.1386/sfs_00070_1

Kline, R. B. (2023). *Principles and practice of structural equation modeling* (3rd ed.). Guilford Press.

Liadeli, G., Sotgiu, F., & Verlegh, P. W. J. (2023). A meta-analysis of the effects of brands' owned social media on social media engagement and sales. *Journal of Marketing, 87*(3), 406–427. https://doi.org/10.1177/00222429221123250

Liu, F. (2024). Light image enhancement based on embedded image system application in animated character images. *Optical and Quantum Electronics, 56*, 154. https://doi.org/10.1007/s11082-023-05736-2

Liu, X., Shin, H., & Burns, A. C. (2021). Examining the impact of luxury brand's social media marketing on customer engagement: Using big data analytics and natural language processing. *Journal of Business Research, 125*, 815–826. https://doi.org/10.1016/j.jbusres.2019.04.042

Martikainen, J., & Sakki, I. (2023). Visual humanization of refugees: A visual rhetorical analysis of media discourse on the war in Ukraine. *British Journal of Social Psychology, 63*, 106–130. https://doi.org/10.1111/bjso.12669

Md Nasir, S., Al Hafis Hashim, M. E., Chee, K. N., Kamaruddin, N. H., Wibawanto, W., & Mohd Hanapiah, M. L. H. (2024). Enhancing student engagement in learning management systems through exploration of avatars in virtual classrooms: A systematic review. *Journal of Advanced Research in Applied Sciences and Engineering Technology, 61*(4), 187–200.

Miles, C. (2023). Visual rhetoric and the analysis of persuasive political communication. In D. Lilleker & A. Veneti (eds.), *Research handbook on visual politics* (pp. 2–13). Edward Elgar Publishing. https://doi.org/10.4337/9781800376939.00007

Mirbagheri, S., & Najmi, M. (2019). Consumers' engagement with social media activation campaigns: Construct conceptualization and scale development. *Psychology & Marketing, 36*(4), 376–394. https://doi.org/10.1002/mar.21185

Monaco, J. (2009). *How to read a film: Movies, media, and beyond* (4th ed.). Oxford University Press.

Munaro, A. C., Hübner Barcelos, R., Francisco Maffezzolli, E. C., Santos Rodrigues, J. P., & Cabrera Paraiso, E. (2021). To engage or not engage? The features of video content on YouTube affecting digital consumer engagement. *Journal of Consumer Behaviour, 20*(5), 1336–1352.

Nikulina, O., van Riel, A. C. R., Lemmink, J. G. A. M., Grewal, D., & Wetzels, M. (2024). Narrate, act, and resonate to tell a visual story: A systematic review of how images transport viewers. *Journal of Advertising, 53*(4), 605–625. https://doi.org/10.1080/00913367.2024.2309921

Noorman, S., & Nafisah, N. (2016). Contesting Indonesia in children's films: An analysis of language use and mise-en-scène. *Indonesian Journal of Applied Linguistics, 5*(2), 296–306.

Oblak, D. (2026). Reimagining TV news for the visual generation: An experimental case study in visual storytelling, narrative strategies, and youth engagement. *Electronic News, 20*(2), 91–112. https://doi.org/10.1177/19312431261428466

Ortiz, A. (2023). Embodied cinematography in Mr. Robot. *Baltic Screen Media Review, 7*(2), 110–125.

Pandian, M., & M. R. S. (2023). Influence of technology on OTT serial storytelling: A study on the pilot of Sacred Games. *Shodhkosh Journal of Visual and Performing Arts, 4*(1), 104–119. https://doi.org/10.29121/shodhkosh.v4.i1.2023.286

Pecheranskyi, I. (2023). Attractive visuality generation within the 360°-VR video format as a technological trend in modern film production. *Culture and Art in the Modern World, 24,* 271–284. https://doi.org/10.31866/2410-1915.24.2023.287709

Rafik, N. F. M., Roslan, N. A., & Yusof, N. H. (2025). AI-assisted media: Revolutionising storytelling in animation pre-production. *SEARCH Journal of Media and Communication Research, 17*(2), 67–84. DOI: 10.58946/search-17.6.P8

Ringle, C. M., Wende, S., & Becker, J. M. (2015). *SmartPLS 3* [Computer software]. SmartPLS GmbH.

Sarstedt, M., Ringle, C. M., Henseler, J., & Hair, J. F. (2014). On the emancipation of PLS-SEM: A commentary on Rigdon (2012). *Long Range Planning, 47*(3), 154–160. https://doi.org/10.1016/J.LRP.2014.02.007

Schellewald, A., Stein, K., Siles, I., Firth, E., & Maddox, J. (2026). This program was brought to you by the algorithm: Rethinking television via TikTok. *Convergence: The International Journal of Research into New Media Technologies, 32*(3), 708–722. https://doi.org/10.1177/13548565261433139

Seidel, D., Morin, X. K., Staffen, M., Ludescher, R. D., Simon, J. E., & Schofield, O. (2023). Building a collaborative, university-based science-in-action video storytelling model that translates science for public engagement and increases scientists' relatability. *Frontiers in Communication, 7*. https://doi.org/10.3389/fcomm.2022.1049648

Shahbaznezhad, H., Dolan, R., & Rashidirad, M. (2021). The role of social media content format and platform in users' engagement behavior. *Journal of Interactive Marketing, 53*(1), 47–65. https://doi.org/10.1016/j.intmar.2020.05.001

Shmueli, G., Sarstedt, M., Hair, J. F., Cheah, J. H., Ting, H., Vaithilingam, S., & Ringle, C. M. (2019). Predictive model assessment in PLS-SEM: Guidelines for using PLSpredict. *European Journal of Marketing, 53*(11), 2322–2347. https://doi.org/10.1108/EJM-02-2019-0189

Shreedhar, G. (2021). Evaluating the impact of storytelling in Facebook advertisements on wildlife conservation engagement: Lessons and challenges. *Conservation Science and Practice, 3*(11), e534. https://doi.org/10.1111/csp2.534

Sinnerbrink, R. (Ed.). (2021). *Emotions, ethics, and cinematic experience: New phenomenological and cognitivist perspectives.* Berghahn Books. https://doi.org/10.1515/9781800731462

Son, J., & Sung, P. (2022). The reciprocal relationship between social engagement and cognitive function among older adults in South Korea. *Journal of Applied Gerontology, 42*(5), 928–941. https://doi.org/10.1177/07334648221148953

Stenberg, M., & Switek, N. (2023). Using television series to teach comparative and European politics. *European Political Science, 22*(3), 325–348.

Su, B. (2025). Navigating the new frontier: The role of AI-driven virtual influencers in consumer engagement. *AI Magazine, 46*(2), e70012. https://doi.org/10.1002/aaai.70012

Tian, X. (2023). The research on the way of portraying human nature in the American film The Shawshank Redemption. *Communications in Humanities Research, 5*(1), 245–251. https://doi.org/10.54254/2753-7064/5/20230235

Tsai, P. (2026). Digital content consumption and youth consumers' purchase behaviour: How short-form videos influence Generation Z consumers in e-commerce. *International Journal of Consumer Studies, 50*(3), e70204. https://doi.org/10.1111/ijcs.70204

Vardeman, C. (2024). Advertising to Gen-Z college students with memes? A focus group study. *Qualitative Market Research, 27*(1), 1–18. https://doi.org/10.1108/QMR-05-2023-0073

Vázquez-Herrero, J., & de Haan, Y. (2022). Journalistic storytelling for complexity. In J. Vázquez-Herrero, A. Silva-Rodríguez, M. C. Negreira-Rey, C. Toural-Bran, & X. López-García (Eds.), *Total journalism: Models, techniques and challenges* (pp. 29–40). Springer. https://doi.org/10.1007/978-3-030-88028-6_3

Wang, H. S., O'Fearghail, C., Zerman, E., Braungart, K., Smolic, A., & Knorr, S. (2021). Visual attention analysis and user guidance in cinematic VR film. In *2021 International Conference on 3D Immersion* (IC3D). IEEE. https://doi.org/10.1109/IC3D53758.2021.9687294

Wang, L., Chen, Y., Xu, Y., & Lin, Z. (2023). From faces to feels: The impact of human images on online review usefulness. *Journal of Travel Research, 64*(2), 284–298. https://doi.org/10.1177/00472875231217738

Wang, X., & Zhong, W. (2023). Evolution and innovations in animation: A comprehensive review and future directions. *Concurrency and Computation: Practice and Experience, 36*(2), e7904. https://doi.org/10.1002/cpe.7904

Wikayanto, A., Damayanti, N. Y., Grahita, B., & Ahmad, H. A. (2023). The comparison of mise-en-scène in Indonesia Wayang Kulit and animation. In H. Saptaningtyas, A. Hidayat, C. T. Handoko & A. Arif (eds), *Proceedings of the International Conference on Multidisciplinary Studies (ICOMSI 2022)* (p. 377–389). Springer Nature. https://doi.org/10.2991/978-2-38476-072-5_37

Williams, W. R. (2019). Attending to the visual aspects of visual storytelling: Using art and design concepts to interpret and compose narratives with images. *Journal of Visual Literacy, 38*(1–2), 66–82. https://doi.org/10.1080/1051144X.2019.1569832

Wong, A. W.-K., Lo, E. S.-C., Lee, C. P.-S., Ng, C. T.-Y., & Chan, B. T.-C. (2025). The impacts of cinematic portrayal of human virtues. *Psychology of Popular Media, 14*(1), 131–143. https://doi.org/10.1037/ppm0000506

Wu, T., & Yan, G. (2026). The stories individuals "like": Advancing the "individual turn" in the narrative policy framework through social media research. *Review of Policy Research, 43*(3), e70103. https://doi.org/10.1111/ropr.70103

Xu, T., & Shanat, M. B. H. (2024). Visual rhetoric: An alternative method of designing Luoshan shadow creative products. *Humanities, Arts and Social Sciences Studies, 24*(1), 145–157. https://doi.org/10.69598/hasss.24.1.263409

Yılmaz, C. (2024). Scratch and mark: Affective intermediality towards Mathilde. *Msgsü Akademi Dergisi, 29*, 127–144. https://doi.org/10.56074/msgsusbd.1453809

Zhang, Z., & Qiu, K. (2025). The complexity of audio-visual content in advertisements influences user engagement behaviours. *Journal of Consumer Behaviour, 24*(5), 2465–2481. https://doi.org/10.1002/cb.70021

Zimand-Sheiner, D. (2024). Four dimensions of brand storytelling: Framework for managing and analyzing online brand stories. *International Journal of Business Communication, 63*(3), 913–933. https://doi.org/10.1177/23294884241261362

Zuhudi, N. N. M., Jafar, M. F., & Adzmi, N. A. (2025). Visual rhetoric in Muslim-friendly tourism: A semiotic analysis of Malaysia's promotional imagery. *SEARCH Journal of Media and Communication Research, 17*(2), 31–49. DOI: 10.58946/search-17.3.P3

Zunjic, S. (2023). VR in French cinematography. *Revista Famecos, 30*(1), e44855. https://doi.org/10.15448/1980-3729.2023.1.44855

Siti Salwa binti Bahari

is a senior lecturer at Politeknik Tuanku Syed Sirajuddin with over 16 years of academic experience. Her academic fields include Video Production in Drama, Video Production in Advertising, Production Design and Film Production. Her expertise spans media, marketing, and film production, with a research interest in digital media and social media engagement. She actively participates in research projects, academic writing, and international conferences in the fields of communication and media studies. She is currently pursuing her PhD in Media Management at UUM.

Aselawati binti Che Ab Adziz

is a senior lecturer at the School of Multimedia Technology and Communication. She holds a PhD in Communication (Screen Studies) from USM and has professional experience in post-production editing and AMP executive roles. Her research and industry engagements focus on cinematic studies, screen psychology, and new media audience engagement.